eneo VM-FHD32PF

Articlenumber: 243066

Short description

32" (81cm) LCD Monitor, FHD, 1920x1080, LED, HDMI, VGA, external Power Supply



Key features

- Professional 32' (81cm) 60Hz LCD monitor
- Maximum resolution Full HD 1920x1080 pixels
- LED backlight
- Digital 3D filtering and noise reduction
- Short response time 5ms
- Designed for continuous operation 24x7x365
- Versatile inputs 2x HDMI,VGA
- Integrated speakers
- Plastic housing including stand

© Copyright VIDEOR E. Hartig GmbH - November 2026 - Subject to technical changes

Features

Product Labels	
EAN/GTIN	4260229840986
Manufacturer number	243066
Series	eneo Monitor
Video	
Resolution (extended)	800x600, 1024x768, 1280x1024, 1600x900, 1920x1080
Maximum Image Resolution (H x V)	1920x1080
Display / Presentation	
Display	Hard coating (3H), Haze: 1%
Aspect ratio	16:9
Contrast ratio (typical)	1000:1
Response time (typical)	5 ms
Brightness (typical)	350 cd/m²
Backlight	LED
Viewing Angle Vertical	178 °
Viewing Angle Horizontal	178 °
Screen diagonal (inches)	32 "
Screen diagonal (cm)	81 cm
Pixel error class	ISO 13406-2, Class 2
Features	
Comb filter	Yes
Menu languages	English, French, Spanish, Italian, German
Interfaces / Inputs / Outputs	
Video Inputs	2xHDMI 2.0, VGA
Transmission Technology	2xHDMI 2.0, 1xVGA
Control Interfaces	no
General	
Applications	24/7
Dimensions (WxHxD) (extended)	728,40x424,85x220,20mm
Weight	6.5 kg
Fortification	VESA Standard 100x100mm
Color (Housing)	Black

© Copyright VIDEOR E. Hartig GmbH - November 2026 - Subject to technical changes

Continuation Features

Housing material	Plastic
Power consumption	35 W
Power supply	12VDC
Energy efficiency class	E
Scope of Delivery	
Scope of delivery	manual, Power supply unit 100 ~ 240VAC / 12VDC, 50/60Hz, power cord, feet
Notes	
Remark	NDAA compliance under Section 889

Optional Accessories

Art. Nr	Name	Product description
224229	eneo VM-LCDWMB2	Wall bracket for LCD monitors horizontal adjustable, support up to max. 8 kg
241894	jetrics VM-UWM10	Universal Wall Mount for LCD Monitors, up to max. 27", VESA support up to 15 kg max.
241896	jetrics VM-UMA10	Aluminium gas spring monitor arm for wall mount, LCD Monitors, max. 27" support up to 7 kg max.
241897	jetrics VM-UTM10	Universal Table Mount for LCD Monitors, up to 45", VESA support up to 13Kg max.
241898	jetrics VM-UWM30	Universal Wall Mount for LCD Monitors, up to 43", VESA support up to 20Kg max.
241900	jetrics VM-UCWM20	Compact slim tilt wall mount LCD Monitors, 23" to 42", VESA support up to 25Kg max.

Optional Recommendations

Art. Nr	Name	Product description
217543	jetrics jetcon HDMI Kabel 1	
217545	jetrics jetcon HDMI Kabel 3	
227066	jetrics jetcon HDMI Kabel 5	

© Copyright VIDEOR E. Hartig GmbH - November 2026 - Subject to technical changes

Technical Drawing

Maße / Dimensions in mm

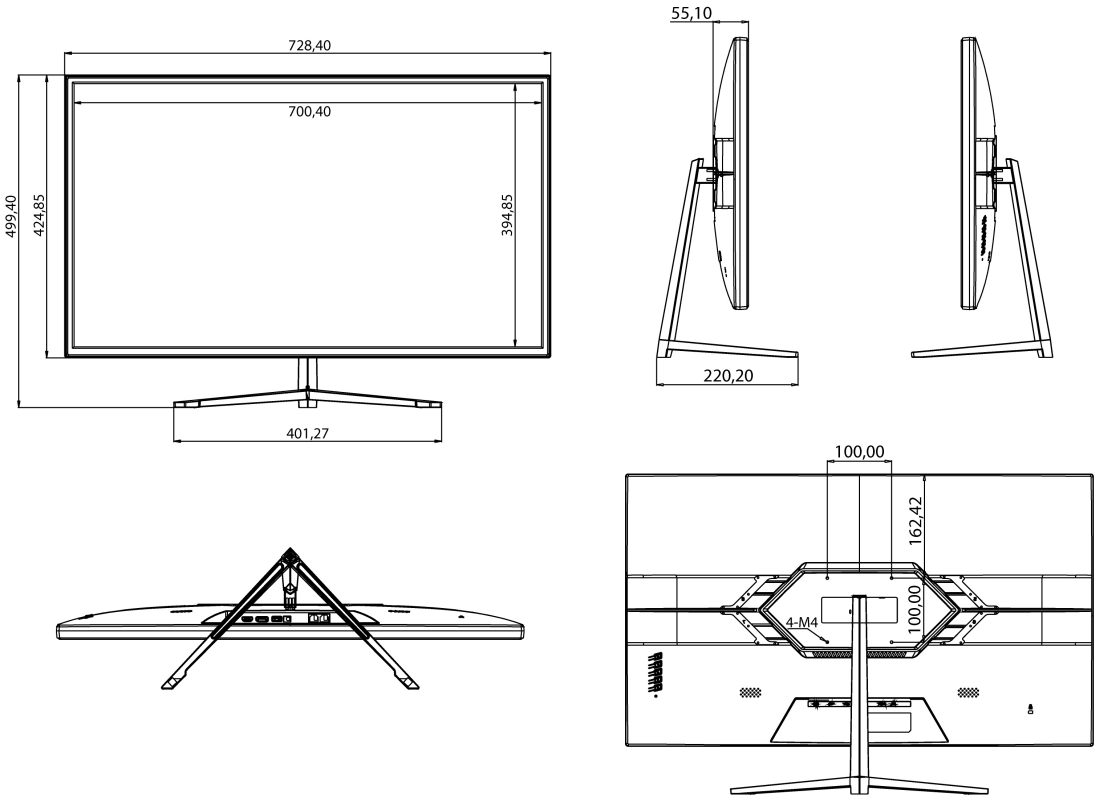

eneo is a registered trademark of
VIDEOR E. Hartig GmbH
Carl-Zeiss-Straße 8
63322 Rödermark, Deutschland

Phone: +49 6074 - 888 - 300
Fax: +49 6074 - 888 - 100
E-Mail: info@eneo-security.com
Web: www.eneo-security.com

© Copyright VIDEOR E. Hartig GmbH - November 2026 - Subject to technical changes